Preventive Maintenance Guidelines

Small Bus, Van, Wagons

Florida Department of Transportation
Public Transit Office

"It is the neglect of timely repair that makes rebuilding necessary."

RICHARD WHATLEY

Preventive Maintenance Guidelines

Table of Contents

Introduction 1

Preventive Maintenance Arrangements 2

Preventive Maintenance Inspections 4

- Mileage Intervals 5
- Form – Inspection 6
- Inspection Guidelines 7

Daily Vehicle Inspections 21

- Form – Daily Vehicle Inspection Checklist 22
- Notes to drivers about daily inspections 24
- General Notes about daily inspections 29

Comprehensive Maintenance Record 30

- General notes about Comprehensive Maintenance Records 31
- Form – Work Order 32

Warranty Recovery System 33

Introduction

Preventive Maintenance: *a term used to describe the performance of regularly scheduled maintenance activities on a vehicle in order to prevent the possibility of malfunctions, to extend vehicle life, and to reduce maintenance and operating cost. If the majority of your vehicle repairs are made after the vehicle experiences a mechanical failure, you do not have a functioning preventive maintenance program.*

A well-established comprehensive preventive maintenance program is as important to a successful transportation system as the actual purchase of the vehicles.

The Preventive Maintenance Plan proposed herein consists of:

- *Making preventive maintenance arrangements*
- *Adhering to a preventive maintenance schedule*
- *Establishing a vehicle inspection check list*
- *Conducting daily vehicle inspections*
- *Completing corresponding inspection checklists*
- *Establishing an operating maintenance budget, and*
- *Keeping a comprehensive maintenance record on file for each vehicle.*

Preventive Maintenance Arrangements

It is preferred to make maintenance arrangements in the initial planning stages of any transportation program. If you already have a program in place it is wise to review it in order to ensure it meets your current needs.

Maintenance can be arranged in a variety of ways to fit your system needs:

1. **Contract maintenance out to commercial mechanics.**

2. **Arrange for other agencies such as city or county, or school bus garages to maintain vehicles.**

3. **Set up an in-house program.**
   Major advantages to an in-house program:
   - Vehicles will be routinely checked for problems
   - Mechanics will be familiar with the vehicles
   - And most important the mechanic will be your employee.

4. **A Combination program: in-house routine maintenance combined with other work contracted out.**
   Examples:
   Potential in house work: routine and scheduled maintenance i.e.; oil change, oil filter change, air filter change and PVC valve change. Jobs to contract out: those requiring special expertise, tools or machinery.

Note:

If you choose to have you own mechanic and allow him/her to perform the preventive maintenance inspections he/she should meet the following minimum requirements:

- Is knowledgeable of and has mastered the methods, procedures, tools, and equipment used when performing an inspection

- Has at least one year of training and/or experience as a mechanic or inspector in a vehicle maintenance program and has sufficient general knowledge of the vehicles owned and operated by your agency in order to recognize deficiencies or mechanical defects.

In addition to the above, you may have your inspections satisfy your annual safety certification as required by Florida Department of Transportation Safety Regulation. Your mechanic must be knowledgeable of the requirements set forth in Rules 14-90.007, 14-90.008, 14-90.009, Florida Administrative Code.

Important:

For an effective in-house preventive maintenance program, the following minimal facilities are necessary:

- A garage or building for vehicles to be brought under cover to be serviced
- Proper drainage for washing vehicles in your garage
- A recycling method for motor oil and other waste
- Equipment for lifting or jacking vehicles
- Jack stands
- A complete set of hand tools – wrenches, sockets, pliers, etc.

Preventive Maintenance Inspection

After you have made arrangements for your maintenance program by considering your system's facilities and personnel strengths and limitations, work with your drivers and mechanics, or repair shop, to develop a basic maintenance schedule.

Mechanics or repair shops must be made aware of, and become familiar with, the minimum maintenance requirements for each vehicle, along with all State and Federal Requirements. With each vehicle, maintenance must be performed either at a specific mileage increment or within a specified period of time. If routine and proper maintenance is not performed, the vehicle's reliability will suffer, its work life could be shortened and its warranty provisions may be violated.

A sample preventive maintenance program has been provided on pages 5-16 to act as a guide in setting up your program. The attached program outlines specific requirements and preferred mileage schedules. This program will meet the needs of most agencies; however, as a general rule, you should compare this vehicle preventive maintenance schedule with the schedule provided in the owner's manual for your vehicles. Always go with the most stringent.

PREVENTIVE MAINTENANCE INSPECTION
MILES / INTERVALS
SMALL BUS, VAN, AND WAGON

Mileage	Type Inspection
6,000	A
12,000	B
18,000	A
24,000	C
30,000	A
36,000	B
42,000	A
48,000	C
54,000	A
60,000	B
66,000	A
72,000	C
78,000	A
84,000	B
90,000	A
96,000	C
102,000	A
108,000	B
114,000	A

FORM 824-02
03/87

STATE OF FLORIDA DEPARTMENT OF TRANSPORTATION

BUS FLEET PROGRAM

INSPECTOR _____ VEHICLE NO. _____

WORK ORDER NO. _____ ODOMETER _____

DATE _____

VANS AND WAGONS

PREVENTIVE MAINTENANCE AND INSPECTION

SYMBOLS

- ☑ OK
- ☒ REPAIRS REQUIRED
- ☒ REPAIRED OR ADJUSTED
- ☒ NOT APPLICABLE

	REMARKS	(CHECK ONE) TYPE INSPECTION		
		A 6,000	B 12,000	C 24,000
	INTERIOR INSPECTION			
1.	All seats — belts — condition, secure mounting, operation			
2.	Doors condition, hinges, latches, operation of door windows			
3.	Flooring, headliner, side panels, vent louvers, operation & condition			
4.	Mirror-inside, right & left side mirror, condition & operation			
5.	Lights-interior, hi-lo beam, turn signals, hazard flasher, parking			
6.	Lights-clearance, backup, brakes, license, instrument panel			
7.	Warning system, switches, gauges, trouble lights, condition & operation			
8.	Starter system — automatic choke — key operation			
9.	Windshield wipers, w/s washer, w/s wiper speed — condition & operation			
	Glass — windshield, side glass — condition, horn — operation			
10.	Comfort system — heater, defroster, air conditioning, blower speed			
11.	Fire extinguisher — charged, first aid kit — complete			
	EXTERIOR INSPECTION			
12.	Paint, dents, rust, decals, bumpers — brackets, condition			
13.	Tires — tread wear, wheel lugs, hubcaps, valve cores, condition			
14.	Access doors, fuelport & cap, engine covers & latch condition			
	SERVICE AND OPERATION INSPECTION			
15.	Engine oil & filter — change & replace			
16.	Inspect & lubricate — ball joints, steering & driveline, etc.			
17.	Battery — terminals, water level, battery box & holddown-condition			
18.	Cooling system, hoses, fan, shroud, belts, overflow tank, radiator			
19.	Air cleaner, crankcase air filter, PVC filters			
20.	Belts, hoses, wiring — condition			
21.	Brake operation check, brakes, pedal, parking brake			
22.	Brakes — rotors, pads, caliper, lining, drums			
23.	Hood, transmission fluid level, filter & line, cooler			
24.	Transmission shift through all ranges, backup lights			
25.	Acceleration, steering, tracking, wheel balance			
26.	Front wheel bearings, drive shaft — U joints			
27.	Shocks, springs, lubricate linkages			
28.	Chassis — check for leaks, condition of bushings, rear axle, differential fluid level			
29.	Engine tune-up — plugs, wires, carburetion			
	ACCESSORIES			
30.	Two way radio — operational check			
31.	Wheelchair lift, tiedown, operation			
32.	Spare tire, jack, tire tools			
33.	License plate, vehicle registration, operator manual			
34.	Air conditioning, system check, freon level, drier			

MILEAGE AND TYPE PM NEXT DUE
MILEAGE _____
TYPE _____

NOTES

PREVENTIVE MAINTENANCE INSPECTIONS
SMALL BUS, VAN, AND WAGON

The preventive maintenance inspection is a program of routine checks and procedures performed on a scheduled and recurring basis to avoid breakdowns and prolong equipment life.

The **"A"** Inspection is performed every 6,000 miles. It is designed for the inspection, service and replacement of certain items at predetermined times and to identify any possible defects which might have occurred and to make minor adjustments as necessary.

The **"B"** Inspection is performed each 12,000 miles. This inspection repeats the "A" Inspection items and includes certain additional items which should be inspected and serviced as indicated.

The **"C"** Inspection is a technical and performance inspection and is accomplished each 24,000 miles, The "A" and "B" Inspection items are repeated and additional scheduled items are required to be accomplished which were not part of the other inspection intervals.

A. 6,000 MILE SERVICE AND MAINTENANCE CHECK:

Interior Inspection:

1. <u>Fire Extinguisher / First Aid Kit / Safety Triangles</u>

Inspect the above mentioned safety equipment to ensure it is in proper working order, securely mounted, and easily accessible. Fire extinguisher must be fully charged with a dry chemical or carbon dioxide, having at least a 1A:BC rating and bearing the label Underwriters Laboratory Inc.

2. All Seats / Seat Belts

Seat covering for the driver and passenger seats should be inspected for rips, tears, gouges, exposed springs, and security of floor mounting. Seat belts should be inspected for proper retraction mechanisms. Arm rest should be inspected for proper attachment to seat(s). Any folding seats should be checked for proper operation of adjustment controls. The driver's seat should be checked for proper fore and aft movement and tracks should be lubricated as necessary.

3. Doors / Hinges / Latches

Lubricate door hinges and latches, check operation of windows, doors, and the condition of the glass. Check condition of exit signs. Check emergency exit to insure it functions and that it is properly identified.

4. Flooring /Headliner / Side Panels /Grab Rails

Inspect floor covering for tears, rips, or gouges. Inspect headliner for damage, sag, or dirt. Inspect the condition of side panels.

On vehicles designed to allow standees check the condition of the standee line and sign. The line must be of contrasting color at least two inches wide and the sign, prohibiting anyone from occupying a space forward of the line, must be posted at or near the front of the vehicle. Inspect condition of the grab rails for the standee passengers.

Tighten grab rails as necessary. Note if extensive repairs are necessary.

5. Mirrors

Check inside rear view mirror(s) for proper mounting, adjustment, and condition of the glass. Also check the right and left exterior mirrors for adequate field of vision.

6. Interior Lights

Inspect the interior lights, and the step well lights if applicable, for proper function by operating door opening switches, dome light switch, rheostat, and the turn signal as well as the hi-lo beam indicator switch.

7. Exterior Lights / Horn

Outside assistance may be required when making this check. Check parking, low and hi beam headlights, turn signal operation front and rear, and hazard flashers. Turn on all outside clearance lights and check operation. At this time also check license plate lights, back-up lights, and brake lights. All lighting must comply with the minimum requirements set for the in Florida Statutes 316.220, 316.221, 316.224, 316.225, 316.226, 316.234, and 316.235. Check horn. The horn must be capable of emitting a sound audible under normal conditions from a distance of not less than 200 feet.

8. Warning system

Activate ignition switch and check “trouble” lights for proper operation. If the vehicle is equipped with gauges check proper readings after the engine has been started. Check all switches, levers, and knobs for proper function.

9. Starter System / Back-up Alarm

When starting engine listen for starter drag or grind, belt squeal, and any other unusual noises. As engine warms monitor all gauges. While depressing the brakes shift the vehicle into reverse and check the audible back-up alarm.

10. Windshield / Windshield Wipers / Washers / Blades

Inspect windshield for cracks, scratches, and any visible damage. Operate windshield wipers through all ranges on wet glass. Inspect condition of windshield wiper blades and arms. Replace if needed. Check washer fluid level.

11. Windows

Inspect side and rear windows for cracks, scratches, and proper function of opening mechanisms.

12. Comfort System

Operate and check heater and air conditioning controls through all selector ranges and check varying fan speed for proper function. Check rear unit output as applicable.

Exterior Inspection

13. Exterior Body and Components

Inspect exterior of vehicle for signs of body damage, missing trim, decals, paint condition, and any signs of developing rust. Inspect the outside of all windows for cracks, blemishes, or other damage. Inspect mirror brackets for secure mounting, rusting, or broken glass.

14. Tires and Wheels

Inspect all tires for signs of uneven wear due to imbalance or improper front end alignment, check for exposed cord or steel belts, inspect valve cores, and check sidewalls for scrubbing or damage. Determine tread depth. Tread group pattern depth shall not be any less that 4/32 (1/8) inch, measured at any point on a major tread groove for tires on the steering axle and no less that 2/32 (1/16) inch measured at any point on a major tread groove for all other tires. Check air pressure in all tires including spare. Check condition of spare tire and mounting.

Check tires for cuts, nails, or other embedded foreign objects. Check wheel lugs for proper torque. Check all wheels, including spare, for any damage or improper bead seating of tire. Check for missing balance weights. Check hubcaps for secure mounting.

15. Access Doors

Inspect exterior access doors and lubricate hinges or spring latches as necessary. Check fuel cap for proper fit and any signs of damage to fuel servicing piping / hoses. Check hood latch and lubricate. Check hood retainer bar.

Service and Operation Inspection

16. Engine and Oil Filter

Under normal operating conditions, change oil and filter every 6,000 miles. Check transmission fluid level and condition of fluid.

17. Ball Joints / Steering / Drive Line (Lubricate)

Lubricate and inspect all ball joints, steering and drive lines, and all other points with zerk fittings. Check power steering for visible signs of fluid leaks. Check the drive line universal joints and yokes for wear. Replace any broken or damaged zerk fittings.

18. Battery

Check battery mounting tray condition (corrosion and wear) and battery hold-down. Check battery case for cracking or damage. Check post and fasteners for corrosion – clean and cover with protectant. Check cables for fraying or signs of deterioration. If applicable check and service water levels. If maintenance free battery check "green" indicator.

19. Cooling System

Visually check cooling system for leaks. Check the overflow tank for adequate coolant, and inspect the cleanliness of the coolant. Inspect the condition of the upper and lower radiator hoses and check the security of the fasteners. Check butterfly drain for snugness. Inspect water pump and engine intake at the thermostat housing for signs of leaks.

Inspect radiator cap for signs of leaks or pressure loss. Before removing the cap allow the engine to cool down. Relieve any built-up pressure in the system. Remove and inspect the radiator cap. At this time, the radiator cores and the interior of the radiator housing may be visually inspected for corrosion or clogging. Also, if circulation problems are suspected, operation of the water pump and circulation of the coolant may be verified-with the engine running.

20. Air Cleaner / Filters

Remove air filter and inspect. Inspect air intake hoses and clamps. Visually inspect all vacuum hoses and connections. Inspect fuel lines for leaks or damage.

21. Belts / Hoses / Wiring

Inspect all belts for signs of wear, fraying, cracks, glazing, and proper tension. Inspect heater hoses and connections. Inspect wiring for signs of chafing, corrosion, loss of insulation and crimping. Ensure wiring does not come in contact with moving parts or heated surfaces.

22. Under Hood / Exhaust System

Check transmission fluid level with the fluid warm and the engine running. Check color of fluid for any signs of overheating. Visually inspect the transmission pan, front and rear seal, speedometer drive, and dipstick tube for signs of leakage. Visually check the transmission oil cooler, lines, and connections for signs of a leak.

B. 12,000 MILE SERVICE AND MAINTENANCE CHECK

23. Brakes

Remove wheels and inspect all brake pads/linings for wear. Check rotors/drums for wear, scoring, and warping. Check calipers/cylinders and brake lines for signs of wear or leaks. Check for any dirt or grease accumulation on the brake system.

24. <u>Operational Check</u>

Check for smoothness of acceleration, centering of steering wheel, and the proper tracking of the vehicle, smoothness of turns, balance of tires, and front end alignment. Also check for looseness in steering wheel.

25. <u>Transmission</u>

Check operation of shift lever and indicator. Check operation in each gear. Check for proper acceleration through gear ranges in drive position.

C. 24,000 MILE SERVICE AND MAINTENANCE CHECK:

26. <u>Wheel Bearings / Driveshaft</u>

Remove and inspect front wheel bearings, clean and lubricate or replace if necessary. Inspect drive shaft, u-joints, and slip joints. Lubricate as necessary.

27. <u>Shocks / Springs</u>

Inspect shock absorber cylinders for signs of leakage. Check bushings for signs of wear and the mounting brackets for secure mounting. Inspect coil and/or leaf springs for signs of damage or wear. Inspect tie rod ends, upper and lower ball joints, and drag links for signs of wear. Lubricate all points equipped with zerk fittings.

28. Rear Differential

Inspect rear axles and axle housing for signs of stress, wear, and leaks. Check differential level. (Note: Change differential fluid every other "C" inspection.

29. Engine Tune-Up

See vehicle service manual for details.

30. Change Transmission Fluid and Filter

Remove transmission pan and drain fluid. If the transmission torque converter is equipped with a drain plug, drain fluid from it as well. Inspect debris in the bottom of pan for signs of internal transmission damage. Check the color of fluid for signs of overheating. Remove and replace filter screen. Note any abnormalities on the check off sheet.

Accessories

31. Wheel Chair Lift and Accessories

Inspect wheelchair tie downs for secure mounting and anchoring to floor. Safety belts should be clean and properly installed. Check retracting assembly. If four point tie downs are used check security of floor fasteners, connectors, and belts.

When operating lift through all ranges and functions ensure lift operation is inhibited unless the vehicle is stopped and vehicle movement is prevented. Verify there is platform lighting when the lift is deployed. Make sure vehicle movement is prevented unless the lift is fully stowed.

Check padding and labels. Check emergency back-up system if equipped. Lubricate appropriate lube points (see illustrations at the end of this section).

32. <u>License Plates / Registration / Operators Manual</u>

Check condition and currency of license plate and registration and appropriate manuals. Insure accident report forms and other appropriate documents are up to date and available in the vehicle. Check for operating manual for the wheelchair lift.

33. <u>Air Conditioning Systems Check</u>

Each spring, prior to the season for constant air conditioning use, the air conditioning system should be scheduled for a thorough operational check. The system should be checked with the appropriate air conditioning service equipment and gauges. Check the entire system for leaks.

Note: The Freon level should be checked and serviced as necessary.

It the system is to be serviced with the opening of a closed system, the complete system should be evacuated; the receiver dryer replaced and the system must be completely recharged, including refrigerant oil.

Note: All air conditioning work must be performed by a licensed certified technician.

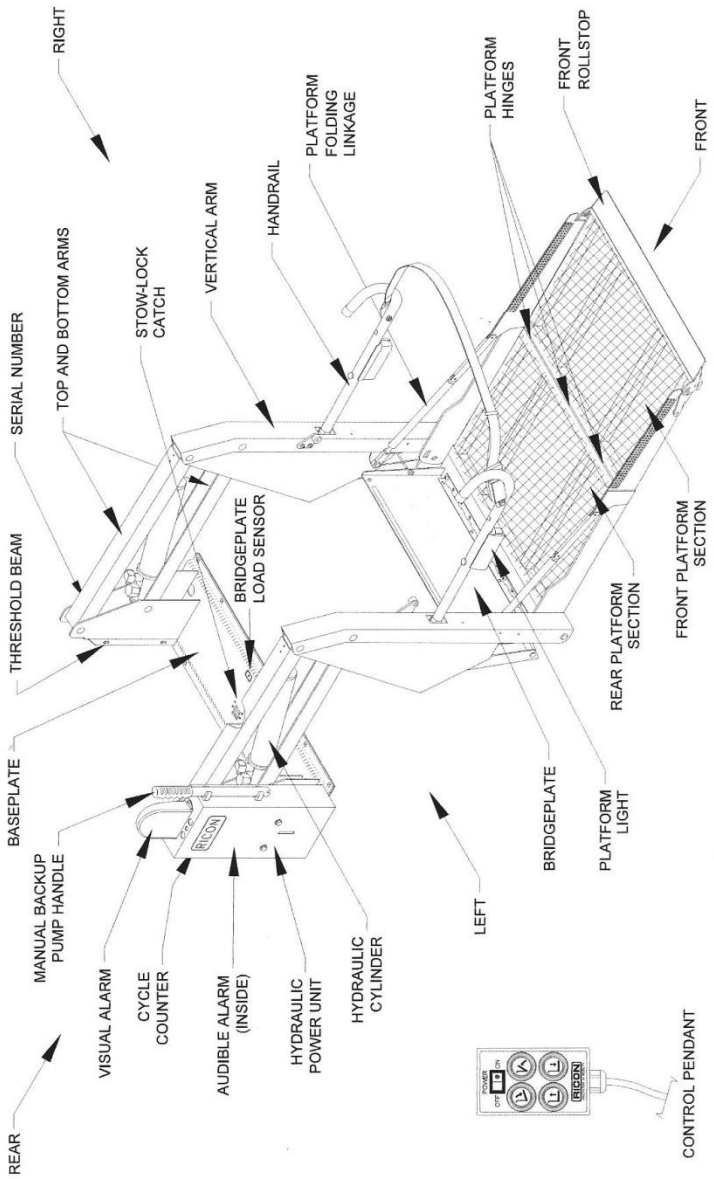

K-Series Ricon Lift Major Components

Regular maintenance of the Ricon KlearVue K-series Public Use wheelchair lift will optimize its performance and reduce the need for repairs. This chapter contains lubrication and cleaning instructions, a maintenance schedule, troubleshooting section, and maintenance diagrams.

⚠ CAUTION
This Ricon product is highly specialized. Maintenance and repairs must be performed by an authorized Ricon service technician using Ricon replacement parts.

A. LUBRICATION

⚠ CAUTION
Do not lubricate motor or other electrical components. Lubrication of electrical components may collect dirt and debris, causing short circuits.

Lubrication should be performed at least every six months or sooner depending on usage.
Lubricate lift at points indicated with lubricants specified.

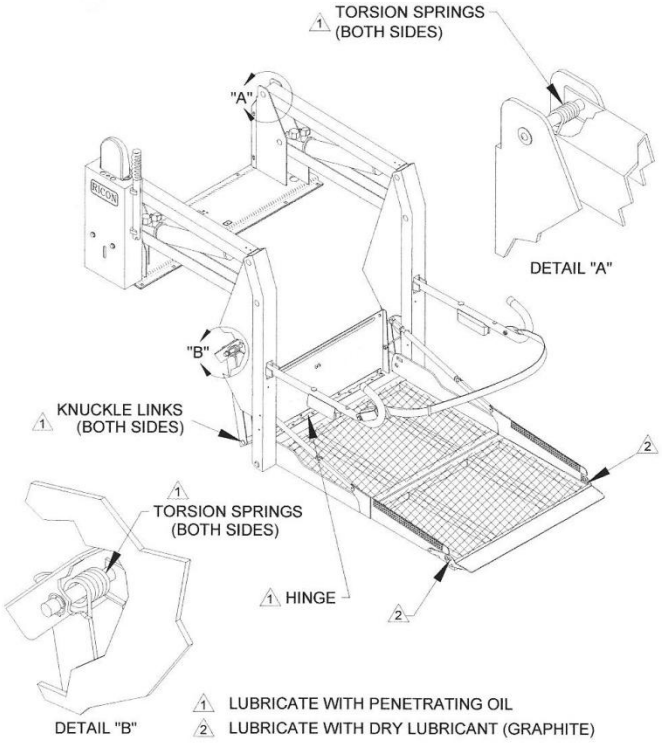

K-Series Ricon Lift Lubrication Points

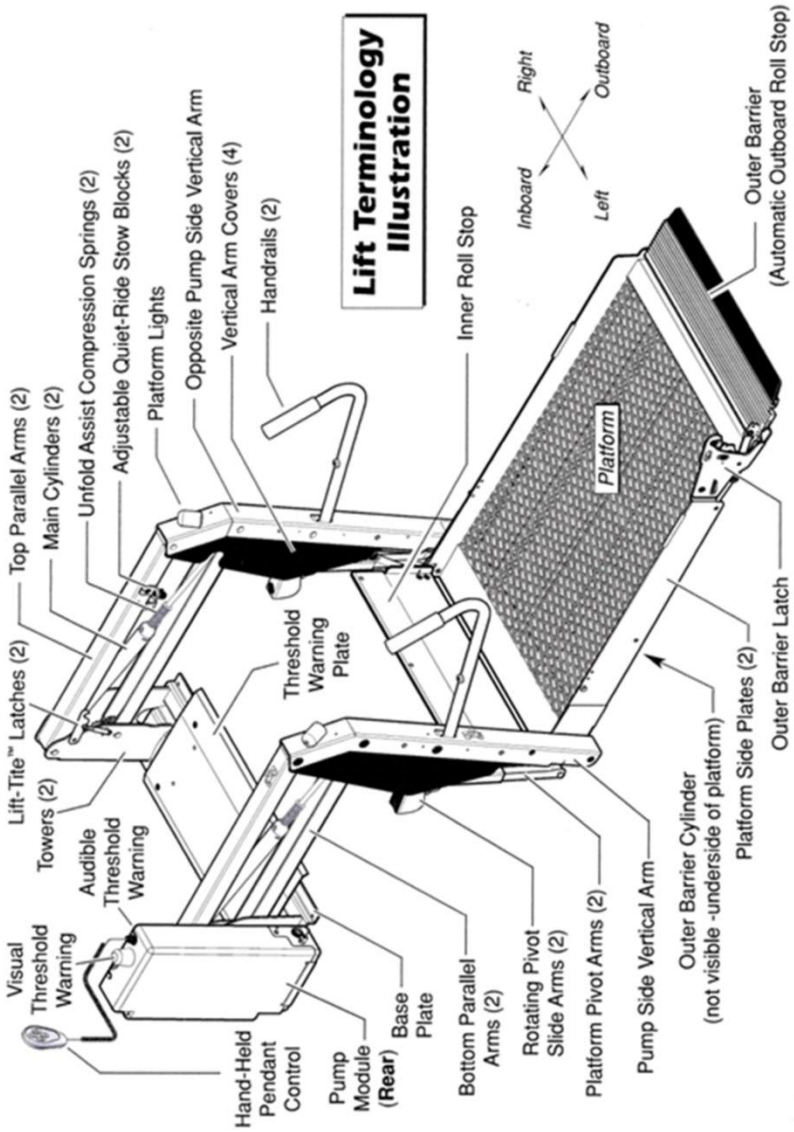

Braun Millennium Series

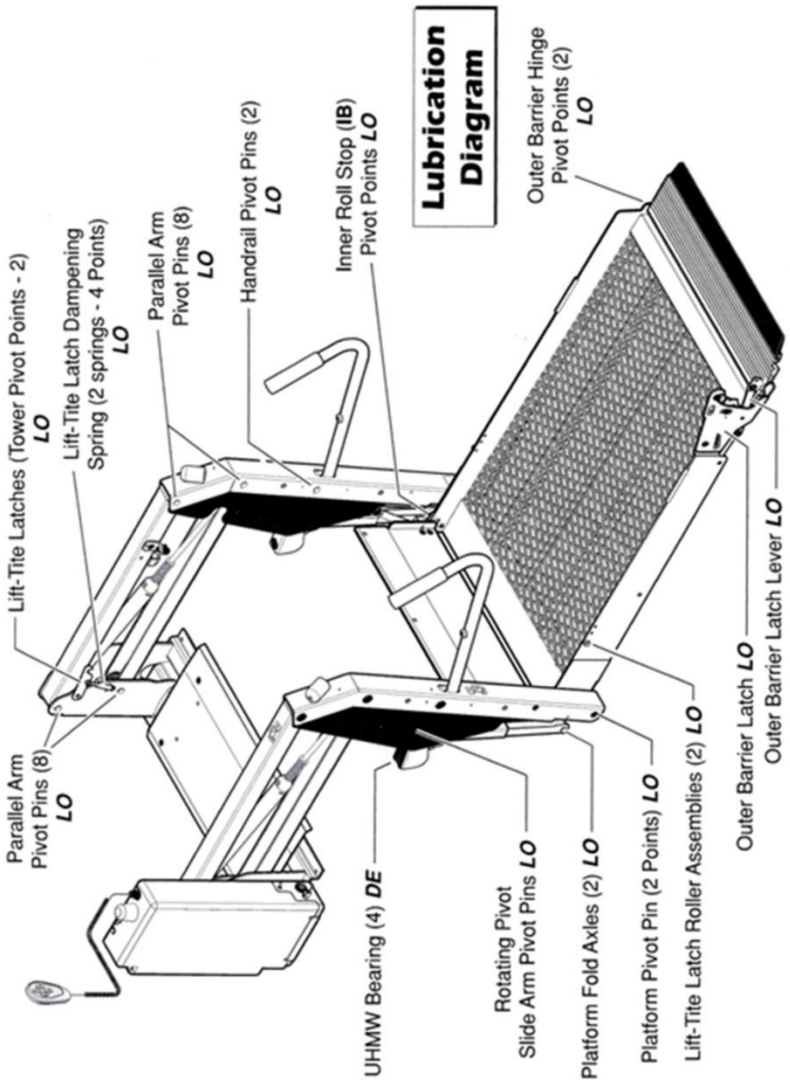

LO=Light Penetrating Oil (30 Weight or equivalent)

DE=Stainless Stick Style tube Door-Ease

Braun Millennium Series

DAILY VEHICLE INSPECTION

Daily vehicle inspections are crucial to the success of the Preventive Maintenance Program. Investing a short time on a daily basis to inspect each vehicle will help detect problems early, thereby improving safety and decreasing vehicle repair cost.

Each driver will inspect his or her vehicle before departure by completing the Daily Vehicle Inspection Checklist. The completed checklist is submitted to the transportation manager at the end of the drivers shift so that necessary maintenance can be noted and scheduled accordingly.

The following notes should be given to each driver to use during vehicle inspections and to keep as a reference tool.

DAILY VEHICLE INSPECTION CHECKLIST

Inspect each item below. If there is not a problem place a (/) in the box to the left of the item. If there is a problem, an item needs maintenance, or damage is found, place an (x) in the box to the left of the item. Use the box to the right for comments.

Vehicle ID #_____		Date_____/_____/_____
Under Hood		Comments
	Oil level	
	Radiator level	
	Battery level	
	Windshield Washer level	
	Engine/Hoses/Belts	
Interior		Comments
	Gauges/Instruments	
	Windshield Wipers	
	Passenger Doors	
	Horn	
	Steering	
	Brakes	
	Blower Fans	
	Interior Lights	
	Rear Vision Mirrors	
	Cleanliness	
Safety Equipment		Comments
	Flares/Triangles	
	First Aid Kit	
	Flashlight	
	Back-Up Alarm	
	Fire Extinguisher	
Accessibility Equipment		Comments
	Fully operable W/C lift/ramp	
	Proper number of belts and securement devices	
	Belts and securement devices in good condition	
Exterior		Comments
	Headlights	
	Tail/Brake Lights	
	Turn Signals	
	Clearance Lights	
	Windshield Wipers	
	Fresh Body Damage	
	Exhaust System	
	Tires/Wheels	
	Cleanliness	

Carefully inspect the entire vehicle exterior.
On the illustrations below, locate and note any damage or problems using the following code:

Dent: **X** Scratch: ⌇

Indicate any other damage by circling the area and then describe the damage.

_____
_____
_____
_____
_____
_____
_____
_____

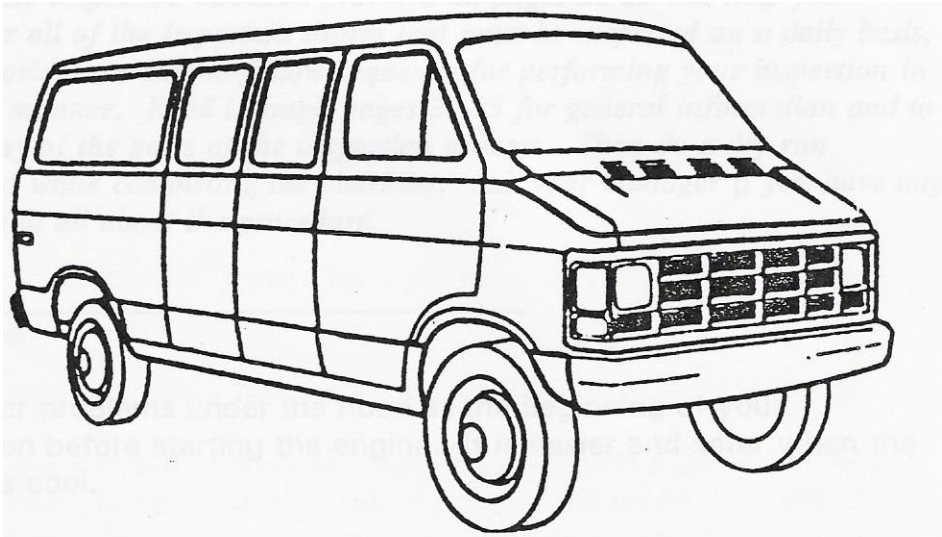

_____
_____
_____
_____
_____
_____
_____
_____

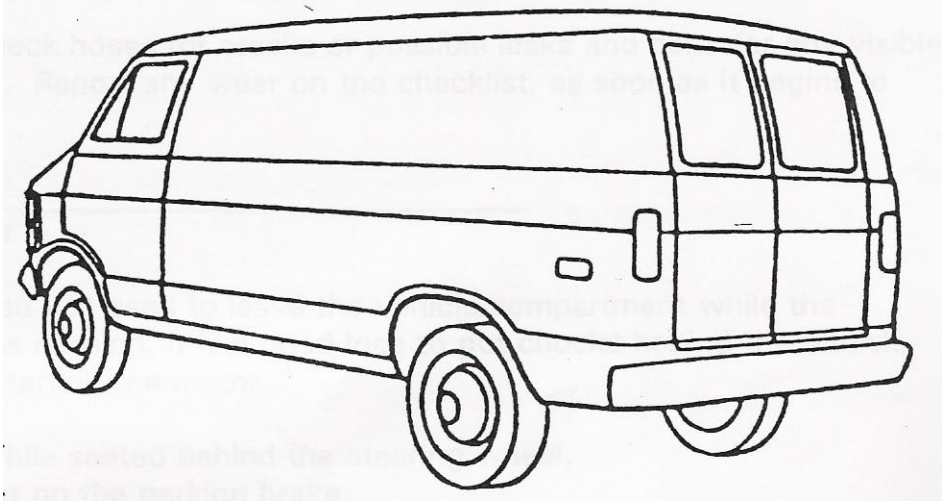

Drivers Signature: _____Date:_____/_____/_____

NOTES TO DRIVERS ABOUT THE DAILY VEHICLE INSPECTION

The vehicle inspection checklist provided to pages 20-21 will help you remember all of the important things that must be inspected on a daily basis, and it provides an easy-to-follow sequence for performing your inspection in a logical manner. Read through pages 22-27 for general information and to clarify any of the parts of the inspection process. Then do a dry run inspection while completing the checklist. Ask your manager if you have any questions at all about the procedure.

Under the hood

Check for problems under the hood at the beginning of your inspection before starting the engine. It is easier and safer when the engine is cool.

Check the engine, radiator, and battery fluids. If low, make a note of it on your inspection checklist. If any fluids are below the safe level, see the mechanic for assistance.

Also, check hoses for cracks or possible leaks and belts for any visible damage. Report any wear on the checklist as soon as it begins to show.

Vehicle Interior

Since you will need to leave the vehicle compartment while the vehicle is running, it is a good idea to put the chocks behind the wheels before starting the motor.

Begin while seated behind the steering wheel.
First, **put on the parking brake.**
Then, turn on the ignition.

Check the oil pressure, fuel, and alternator gauges.

If the oil pressure light stays on or the gauge shows the oil pressure to be dangerously low, turn the motor off until the problem can be corrected.

If the alternator or generator light stays on or gauge indicates a discharge, the battery may not be charging. To guard against the possibility of becoming stranded along the route due to a dead battery, have the problem located and corrected right away.

Check the **windshield wipers** to make sure they are working and are not worn or stripped.

Check **passenger door** for proper operation.

Adjust your mirrors so that you can see what you need to see from your normal driving position. When you are adjusting your mirrors, keep in mind what you want to be able to see within your safety zone.

Test your horn to make sure it works.

Turn the steering wheel gently to make sure it is not loose or there is no abnormal play or stiffness in the steering assembly.

Push on the brake pedal. If the tension feels spongy or soft, note this on your checklist. Your brakes may need to be adjusted.

Check the blower fan to see if it works so you will be able to use the heater, defroster or air conditioner.

Check the interior lights. If any lights are not working, note these on your checklist.

Note on your checklist anything in the interior of the vehicle that needs attention.

Safety Equipment

Check your emergency equipment to make sure it is in the right location and in working order.

Emergency equipment should include:

- A properly charged fire extinguisher
- Warning devices such as cones, triangles, flares
- A first aid kit (if required)
- Extra fuses (if required)
- A flashlight with fresh batteries
- Instructions for manual operation of wheelchair lift

Look around your vehicle to make sure it is clean and clear of trash, debris or loose items. Trash or debris left in the vehicle can be tossed about by careless passengers and can cause slips, falls and fires. A clean vehicle presents a professional image.

Check any special accessibility equipment if your vehicle is so equipped.

Examine tie downs for signs of damage or excessive wear. Make sure they can be properly secured to the floor.

Check all lift and ramps by operating them through one complete cycle. Make sure they are functioning properly. (You may have to move the vehicle to ensure proper clearance while performing this part of the

inspection. This is also a good time to check the interlock system.

Make sure all doors and emergency exits are functional and unobstructed.

Vehicle Exterior

Turn on all exterior lights. With the vehicle in park and the emergency brakes still on, begin the exterior check from the front of the vehicle.

During the exterior inspection, be sure to note and report any evidence of fresh damage to the vehicle. Reporting such damage now may save you a lengthy and difficult explanation or report later. Space is provided for you on the Daily Vehicle Inspection Checklist to note and describe any exterior damage.

Check the headlights, signal lights, emergency flashers, and clearance lights to make sure they are working.

Check the left front tire for any signs of road damage, under inflation, or missing or loose lug nuts. Check the air pressure with an air pressure gauge. Take care to maintain your tires at the recommended pressure.

A soft tire is very susceptible to severe road damage.

An overinflated tire causes a bumpier and less comfortable ride, especially for elderly or disabled. Check the condition of the side marker light.

Move to the back of the vehicle and inspect the left rear tire for obvious damage, Check the air pressure with an air pressure gauge.

While at the back of the vehicle, check the tail lights, the brake lights, turn signals, emergency flashers, and any other

clearance lights, reflectors or signs. (This may require assistance)

Make sure they are free from mud or dirt.

Carry a rag with you to clean any dirty lights which may be hard to see even after dark.

Check the right rear tire. If there are any other lights or outside signs for your boarding doors or lifts, make sure they are in place and clean.

Check under the vehicle. Make sure there are no foreign or unfamiliar objects hanging down or wedged underneath. Listen and check for any signs of an exhaust leak. Also, check the transmission fluid and visually check for puddles of fluid under the vehicle. If the vehicle is leaking fluid, report it to your supervisor.

Move to the front of the vehicle and examine the right front tire in the same manner as the left tire and check the condition of the side marker light.

Now that the engine has reached operating temperature, check the transmission fluid level. Vehicle should be on level surface in park.

Final Preparations

Now, turn off all the lights and the engine and remove the wheel chocks.

If your vehicle is safe and in good condition you are finished with your daily inspection.

If you are not sure or not satisfied with the condition of the vehicle, check with a supervisor before driving the vehicle.

Remember that any problems you experience with the vehicle during your shift should be reported so that repairs or adjustments can be made as quickly as possible.

At the end of your shift, turn in the Daily Vehicle Inspection Checklist to the maintenance manager or your supervisor.

GENERAL NOTES ABOUT THE DAILY VEHICLE INSPECTION CHECKLIST

An important part of preventive maintenance is the establishment of strong communication ties between drivers, mechanics / repair garages, and management. An easy way to ensure and document this communication link is by way of the drivers Daily Vehicle Inspection Checklist.

Drivers should be given blank copies of the checklist to keep on a clipboard in their vehicle.

Each driver will need to conduct the inspection and fill out the checklist before beginning their route. Safety problems should be reported immediately before you start your route.

Drivers should add comments to the checklist if a problem arises during the shift.

The person designated responsible for the maintenance of the vehicles should monitor these checklists daily and schedule maintenance accordingly.

The checklist provided is a sample and you may choose to add or delete items at your discretion, provided it meets or exceeds the minimum requirements in Rule 14.90.006 (7) (a) Florida Administrative Code. In any case, documented daily inspections must be included in the permanent vehicle file.

COMPREHENSIVE MAINTENANCE RECORD

A Comprehensive Maintenance Record should be kept on file for each vehicle. This record should be filled out every time any maintenance is performed on that vehicle.

Benefits of keeping a Comprehensive Maintenance Record on file are as follows:

- ***Provides a quick reference to the vehicle***
- ***Provides a complete history of repairs***
- ***Identifies chronic problems***
- ***Show trends in mileage and fuel consumption***
- ***Track responsibility for repairs***
- ***Records the amount of time vehicle is not available for service***

COMPREHENSIVE MAINTENANCE RECORD FORMS

There are three basic forms commonly used for proper maintenance records. They are the Work Order, Monthly Summary, and the Maintenance Log. Used properly they are a valuable tool in recognizing and correcting problems before they become costly. They are also a valuable tool for monitoring the quality of service you receive from a repair shop. Below is a brief description of the forms.

Work Order

This is a detailed description of a specific repair performed on your vehicle. This form should be used for either in-house or private garage repairs. It can be very helpful when you are trying to identify a chronic problem or research maintenance history.

Monthly Summary

This form provides a monthly summary of the vehicles use. It will show trends in mileage and fuel consumption, provides a quick reference to the vehicle, and records the amount of time the vehicle is not available for service.

Maintenance Log

This form provides a complete history of repairs, identifies chronic problems, and tracks responsibility for repairs. The entire fleet is usually maintained in one book which will provide a quick reference to the vehicle without having to pull the file.

State of Florida Department of Transportation
WORK ORDER

CHECK HERE IF ROAD CALL ☐				
Equip. No.	Bus_____ Car_____ Truck_____ Other_____	Make: _____ Model: _____	Vin:_____ Serial:_____	Odometer Reading

Shop Location	Date In	Date Completed

REPAIR INSTRUCTIONS

_____
_____
_____
_____
_____
_____

MATERIAL USED					OUTSIDE REPAIRS		
Quan	Part No.	Description	Unit Price	Total Price	Description	Unit Price	Total Price
					Cost Summary		
					Total Labor	$	
					Total Material	$	
					Total Outside Repairs	$	
					Job Total	$	
					Mechanic	Labor Hours	

Warranty Recovery System

Every maintenance program should include a warranty recovery system to ensure that cost of parts and repairs on warranty-covered items are recovered.

Failed Components

Parts and components that may have failed prematurely are checked to determine if the part or component is covered under warranty. If the part or component is covered by a warranty, it is returned to the vendor.

Return to manufacturer/vendor

Authorization for warranty return and labor claims, if applicable, are obtained from the manufacturer or vendor. Information is supplied to the vendor on the circumstances of the failure, if known. The item is then returned to the vendor warranty department for repair or replacement. Transit Agency retains copy of the warranty claim form for tracking purposes.

Receipt from manufacturer/vendor

When a unit is received, it is entered into the inventory system coded as a warranty replacement. This is forwarded to the Accounting Department to make the necessary accounting adjustments. Labor credit if received is applied to the appropriate cost center via a credit entry applied to the work order used when the defective part was removed.